ECG Front-End Design

Low-Noise Amplifier, Filtering & Signal Acquisition

PAKISTAN NAVY ENGINEERING COLLEGE -NUST

Instructor: Sir Talha Asif

Course: Instrumentation & Measurement (EE-383)

PREPARED BY:

- Arham Jaffer
- Amir Rehman
- Faris Faisal

Department of Electrical Engineering

DECEMBER 05, 2025

ABSTRACT: FROM SIGNAL TO INSIGHT:

This project addresses the critical challenge of acquiring and processing weak analog signals from sensors. We detail a robust solution involving signal conditioning, precise amplification, filtering the signal , and clear visualization on an OLED display.

SIGNAL ACQUISITION:

- Capturing microvolt-level sensor outputs.

SIGNAL CONDITIONING

- Minimizing noise and preparing for amplification.

PRECISION AMPLIFICATION

- Boosting signal strength with high CMRR.

DATA VISUALIZATION:

- Clear, real-time display of processed data.

INTRODUCTION: THE ECG SIGNAL

Overview:

- An **Electrocardiogram (ECG)** records the electrical activity of the heart.
- Critical for diagnosing cardiac health (Arrhythmias).

Signal Characteristics:

Amplitude: Extremely small (0.05 mV – 5 mV).

Frequency: Range (0.05 Hz – 100 Hz).

Challenge: Signal is buried in noise (Muscle activity)

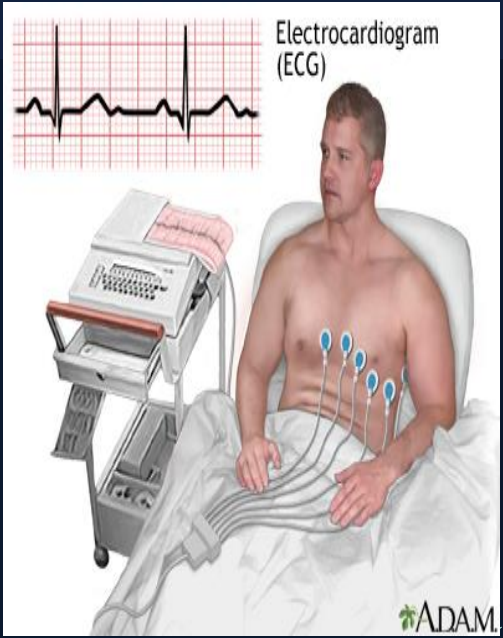

SYSTEM BLOCK DIAGRAM :

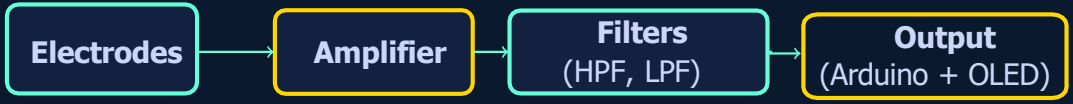

Sensor : Heart Monitor (AD8232)

Amplifier : Low-Noise Amplifier.

Output : Digital visualization.

ECG ELECTRODES:

Biomedical Surface Electrodes:

We utilize standard **Silver-Chloride electrodes.**

Function: Passing the ionic current (body) to the Instrumentation Amplifier.

Placement (Lead):

- RA (Right Arm)
- LA (Left Arm)
- RL (Right Leg - Reference)

SENSOR WITH BRIDGE CIRCUIT:

Convert small sensor resistance change into a differential voltage ($V_1 - V_2$).

Key features:

- Differential output minimizes common-mode errors.
- Small change in resistance → measurable differential voltage.
- High sensitivity by balancing bridge resistances.

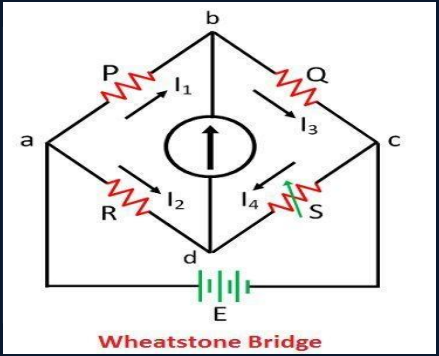

ECG electrodes form the bio-potential source; the bridge helps produce a measurable small differential voltage for the amplifier.

INSTRUMENTATION: AMPLIFIER STAGE:

An Instrumentation Amplifier is used to accurately amplify low-level signals for measurement purposes.

- **High CMRR:** Excellent common-mode noise rejection (high CMRR).
- **Gain Control:** Gain adjustable via an external resistor for flexible amplification

$$G = 1 + \frac{49.4k\Omega}{R_G} \approx 1000$$

- **High precision amplifier :** for measuring small differential voltages.

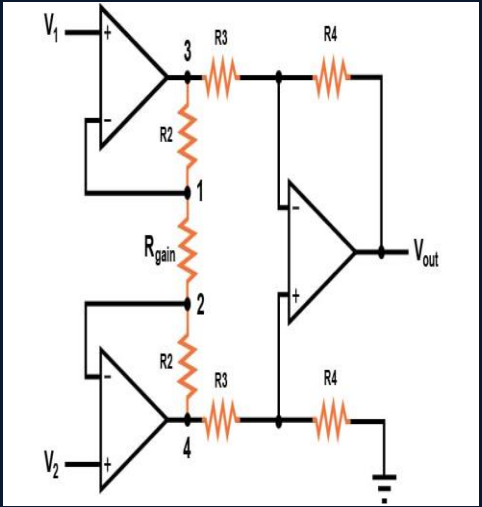

ANALOG SIGNAL CONDITIONING:

1. High-Pass Filter

- fc = 0.5 Hz
- Removes Baseline Drift.
- Caused by breathing or movement.

2. Notch Filter

- fc = 50 Hz
- Eliminates Power Line Hum (Buzzing).
- Most common noise source.

3. Low-Pass Filter

- fc = 100 Hz
- Removes high-freq noise (EMG).
- Ensures clean ADC sampling.

VISUAL OUTPUT: OLED DISPLAY THROUGH ARDUINO:

0.96” I2C OLED Module:

Replaces older LED arrays for precise visualization.

- **RESOLUTION:** 128 × 64 pixels (Scrolling Graph).
- **FEATURES:** High contrast, low power, real-time plotting.

CHALLENGES:

Why Instrumentation Amplifier can not be used?

- ECG electrodes give ionic signals, but **IA** amplifier needs electronic voltage.
- Signal amplitude is very small (microvolts–millivolts), so a normal **IA** cannot amplify it cleanly.
- We need very strong noise removal, but a **instrumentation amplifier** cannot block that noise

Why Bridge Circuit Cannot Be Used?

- ECG electrodes do NOT change resistance, so a **Wheatstone bridge** has nothing to measure..
- Skin impedance changes randomly, making a bridge **unbalanced and unstable**.
- Bridge reads impedance changes, not heart electrical activity.

Why Heart Monitor Sensor (AD8232) Is Required?

- Converts weak ionic signals to clean electrical signals using a dedicated ECG front-end.
- Built-in amplifier + filters + noise reduction, giving a stable ECG waveform.
- It is body-safe and removes strong noise from the ECG signal.

CALCULATIONS:

STAGES	COMPONENTS	VALUES
Amplifier	Gain Resistor (RG)	49.9 kΩ → Gain=100
High-pass Filter	R1, C1	330 kΩ, 1 μF → fc=0.5 Hz
Low-pass Filter	R2, C2	16 kΩ, 0.1 μF → fc =100 Hz
Output Buffer (keeps signal strong and stable)	R3, R4	10 kΩ each → unity gain
Reference / Bias (Centers ECG signal safely)	R5	10 kΩ → sets reference voltage

CONCLUSION:

PROJECT SUCCESS

- Acquired weak bio-potentials siignals using AgCl electrodes.
- Amplified signals using a AD8232.
- Filtered noise .
- Visualized real-time ECG waveform on OLED.

Questions?